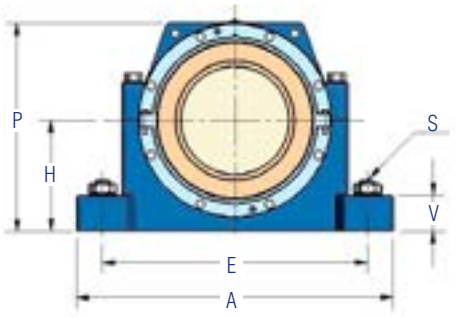

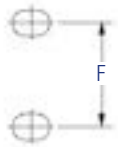

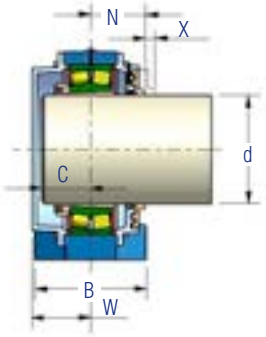

BC - Locating bearing, blind shaft

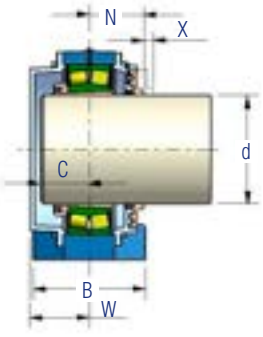

LC - Non-locating bearing, blind shaft

- See page 08 for technical features.
- Standard seal **"ASR"** - "taconite" labyrinth seal with retainer, see page 06 (reference). For seal types ASZF, AS, R, ZF, TC and GS the dimensions are maintained. **Should a different type of seal be requested, the dimensions of the columns "L", "N" and "M" on the table can be modified,** but our engineering department should be consulted for more information.
- These housings are standardized with four holes on their base, but up to size 20 they can be supplied with two holes on the base by simply adding the suffix "D" to the housing's reference (Ex. HSBPD-15-BP-ASZF). The bolt dimensions for housings with two holes on the base are located in the column "S", in brackets.
- They can seat split bearings, however, the designation must be changed by adding the prefix B. For application of other bearing series, please consult our Engineering Department.
- Up to size 56 (inclusively) the bearing's axial movement is blocked by locating rings, for bigger sizes the bearing's axial movement is blocked by the lateral lids.

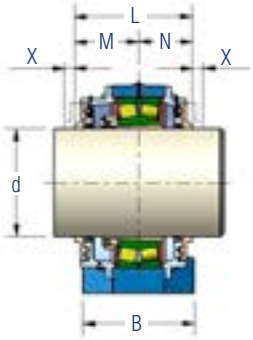

BP - Locating bearing, passing shaft

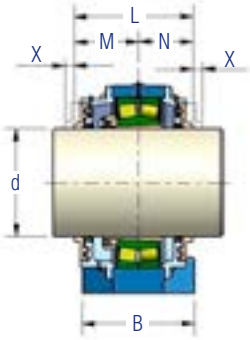

LP - Non-locating bearing, passing shaft

- **Specification example:** HSBP-157-BP-ASZF = HSBP housing, size 157, made of gray cast iron, with four holes on the base, appropriate for seating 22215-K bearing + HA-315 adapter sleeve, for locating bearing and passing shaft, with taconite seal composed of AS axial labyrinth and ZF retainer.

Housing	Shaft diameter		Bearing	Adapter sleeve (complete)	Dimensions (mm)														Weight (kg)
	mm	Inches			H	E	A	B	C	F	L	M	N	P	S	V	W	X	
HSBP 097		1.7/16"		HA 309															
HSBP 098		1.1/2"	22209K	HE 309	57,1	168	210	60	28	30,2	106,5	56,5	50	117	3/8"	22	44	8	4
HSBP 09	40			H 309											(1/2")				
HSBP 101		1.11/16"		HA 310															
HSBP 102		1.3/4"	22210K	HE 310	63,5	171	210	60	28	30,2	114	57	57	126	3/8"	25	43	8	4,5
HSBP 10	45			H 310											(1/2")				
HSBP 115		1.15/16"		HA 311															
HSBP 11	50		22211K	H 311	69,8	194	244	70	30	35	116	58	58	137	1/2"	25	45	9	5,5
HSBP 110		2"		HE 311											(5/8")				
HSBP 133		2.3/16"		HA 313															
HSBP 134		2.1/4"	22213K	HE 313	76,2	224	279	79	36	39,7	116,5	63,5	53	153	1/2"	25	54	9	7
HSBP 13	60			H 313											(5/8")				
HSBP 157		2.7/16"		HA 315															
HSBP 158		2.1/2"	22215K	HE 315	82,6	232	286	79	38	47,6	120,5	65,5	55	165	1/2"	29	56	11	9
HSBP 15	65			H 315											(5/8")				
HSBP 161		2.11/16"		HA 316															
HSBP 162		2.3/4"	22216K	HE 316	88,9	262	330	89	42	54	141	70,5	70,5	177	5/8"	32	60	12	14,5
HSBP 16	70			H 316											(3/4")				
HSBP 175		2.15/16"		HA 317															
HSBP 17	75		22217K	H 317	95,2	265	330	89	44	54	146	73	73	189	5/8"	32	62	12	14,5
HSBP 170		3"		HE 317											(3/4")				
HSBP 18	80			H 318															
HSBP 183		3.3/16"	22218K	HA 318	101,6	279	349	98	46	54	148	74	74	202	5/8"	35	64	11	15
HSBP 184		3.1/4"		HE 318											(3/4")				
HSBP 207		3.7/16"		HA 320															
HSBP 208		3.1/2"	22220K	HE 320	114,3	314	387	111	54	60,3	162	81	81	225	3/4"	38	72	13	21
HSBP 20	90			H 320											(7/8")				
HSBP 221		3.11/16"		HS 322															
HSBP 22	100		22222K	H 322	125,4	344	419	121	58	69,8	157	86	71	249	3/4"	41	76	13	30
HSBP 225		3.15/16"		HA 322															
HSBP 220		4"		HE 322															
HSBP 243		4.3/16"		HA 3124															
HSBP 244		4.1/4"	22224K	HE 3124	133,3	352	419	121	60	69,8	182	91	91	265	3/4"	44	79	14	31
HSBP 24	110			H 3124															

Housing	Shaft diameter		Bearing	Adapter sleeve (complete)	Dimensions (mm)														Weight (kg)
	mm	Inches			H	E	A	B	C	F	L	M	N	P	S	V	W	X	
HSBP 267		4.7/16"		HA 3126															
HSBP 268		4.1/2"	22226K	HE 3126	152,4	389	467	140	64	82,6	202	101	101	293	7/8"	48	83	16	43
HSBP 26	115			H 3126															
HSBP 28	125			H 3128															
HSBP 285		4.15/16"	22228K	HA 3128	152,4	421	511	149	68	85,7	218	109	109	300	1"	51	87	15	51
HSBP 280		5"		HE 3128															
HSBP 303		5.3/16"		HA 3130															
HSBP 304		5.1/4"	22230K	HE 3130	160,3	448	540	159	74	95,2	231	115,5	115,5	321	1"	51	101	15	57
HSBP 30	135			H 3130															
HSBP 327		5.7/16"		HA 3132															
HSBP 328		5.1/2"	22232K	HE 3132	169,9	465	559	159	76	95,2	244	127	117	342	1"	51	107	18	70
HSBP 32	140			H 3132															
HSBP 34	150			H 3134															
HSBP 345		5.15/16"	22234K	HA 3134	179,4	521	629	171	79	108	256	128	128	368	1"	54	108	16	81
HSBP 340		6"		HE 3134															
HSBP 36	160			H 3136															
HSBP 367		6.7/16"	22236K	HA 3136	190,5	565	679	181	79	117,5	249,5	131,5	118	380	1"	54	114	18	82,5
HSBP 368		6.1/2"		HE 3136															
HSBP 38	170			H 3138															
HSBP 382		6.3/4"	22238K	HE 3138	200	584	711	190	86	114,3	263	138	125	400	1.1/4"	60	113	19	97,5
HSBP 385		6.15/16"		HA 3138															
HSBP 400		7"		HE 3140															
HSBP 40	180		22240K	H 3140	209,6	603	749	203	89	127	282	141	141	430	1.1/4"	60	123	18	116
HSBP 403		7.3/16"		HA 3140															
HSBP 448		7.1/2"		HE 3144															
HSBP 44	200		22244K	H 3144	241,3	668	832	222	95	133,3	303	151,5	151,5	475	1.1/2"	70	139	18,5	120
HSBP 445		7.15/16"		HA 3144															
HSBP 487		8.7/16"		HA 3048															
HSBP 488		8.1/2"	23048K	HE 3048	209,6	603	749	203	92	127	282	157	125	420	1.1/4"	60	125	20	132
HSBP 48	220			H 3048															
HSBP 527		9.7/16"		HA 3052															
HSBP 52	240		23052K	H 3052	241,3	668	832	222	98	133,3	298	166	132	473	1.1/2"	70	153	24	173,5
HSBP 528		9.1/2"		HE 3052															
HSBP 565		9.15/16"		HA 3056															
HSBP 560		10"	23056K	HE 3056	241,3	668	832	222	105	133,3	309	174	135	485	1.1/2"	70	158	23	163,5
HSBP 56	260			H 3056															
HSBP 605		10.15/16"		HA 3060															
HSBP 600		11"	23060K	HE 3060	304,8	841	972	375	111	228,6	326	186	140	572	1.5/8"	86	175	23	267
HSBP 60	280			H 3060															
HSBP 647		11.7/16"		HA 3064															
HSBP 648		11.1/2"	23064K	HE 3064	304,8	841	972	375	117	228,6	347,5	194,5	153	583	1.5/8"	86	176	26	282
HSBP 64	300			H 3064															
HSBP 680		12"		HE 3068															
HSBP 687		12.7/16"	23068K	HA 3068	304,8	832	991	387	127	254	375	210,5	164,5	606	1.7/8"	108	185	27	322,5
HSBP 68	320			H 3068															
HSBP 725		12.15/16"		HA 3072															
HSBP 720		13"	23072K	HE 3072	325,4	908	1060	400	127	266,7	380	213	167	636	1.7/8"	114	187	26	395,5
HSBP 72	340			H 3072															
HSBP 765		13.15/16"		HA 3076															
HSBP 760		14"	23076K	HE 3076	325,4	908	1060	400	130	266,7	381,5	211,5	170	710	1.7/8"	114	185	27	418,5
HSBP 76	360			H 3076															
HSBP 805		14.15/16"		HA 3080															
HSBP 80	380		23080K	H 3080	389,9	965	1118	394	141,5	234,9	415	223	192	734	2"	127	218	29	552
HSBP 800		15"		HE 3080															
HSBP 847		15.7/16"		HA 3084															
HSBP 848		15.1/2"	23084K	HE 3084	424,9	1035	1200	419	143	250,8	428	230	198	780	2"	127	214	29	610,5
HSBP 84	400			H 3084															
HSBP 885		15.15/16"		HA 3088															
HSBP 880		16"	23088K	HE 3088	424,9	1035	1200	419	155	250,8	437	243,5	193,5	797	2"	127	214	29	709
HSBP 88	410			H 3088															
HSBP 925		16.15/16"		HA 3092															
HSBP 920		17"	23092K	HE 3092	530	1270	1500	420	159	240	457	248,5	208,5	918	2.7/8"	160	226	29	834
HSBP 92	430			H 3092															
HSBP 965		17.15/16"		HA 3096															
HSBP 960		18"	23096K	HE 3096	550	1300	1530	430	160,5	245	476	255,5	220,5	946	2.7/8"	165	230	31	982,5
HSBP 96	450			H 3096															
HSBP 5007		18.7/16"		HA 30/500															
HSBP 5008		18.1/2"	230/500K	HE 30/500	580	1350	1580	460	170,5	260	487	268,5	218,5	990	2.7/8"	175	240	31	1133,5
HSBP 500	470			H 30/500															